GLF4001

Ultra-Low Current Consumption Power Multiplexer Switch with Auto & Manual Input Selection in SOT23-6L

Product Brief

DESCRIPTION

The GLF4001 is an integrated power multiplexer switch with dual independent power switches connected to a single output pin to enable seamless transition between two input sources.

The GLF4001 provides an automatic selection mode as well as a manual selection mode by the combination of the logic input pins of EN and SEL. The EN input pin is used along with the select (SEL) input pin to select the automatic switching function, select VIN1 only, select VIN2 only, or turn both switches off. In the automatic selection mode, the GLF4001 automatically selects the higher input voltage source out of two input DC power supplies.

The GLF4001 features an ultra-efficient I_QSmart™ technology that offers quiescent current (I_Q) and shutdown current (I_{SD}) in the industry. Low R_{ON} reduces conduction losses while low I_Q and I_{SD} solutions help designers to reduce parasitic leakage current, improve system efficiency, and increase battery lifetime.

The GLF4001 blocks any cross-conduction current between two input power sources. When the switch is disabled, the GLF4001 prevents the reverse current to the input source from the output at any higher Vout than Vin condition.

FEATURES

- Two-Input and Single-Output Power Multiplexer Switch
- Automatic and Manual Input Selection Mode
- Supply Voltage Range: 1.5 V to 5.5 V
  6 Vabs Max
- R_{ON} : 68 mΩ Typ. at 5.5 V_{IN1} or V_{IN2}
  77 mΩ Typ. at 3.3 V_{IN1} or V_{IN2}
- 2 A Continuous Output Current Capability Per Channel
- Ultra-Low Supply Current at Operation
  I_Q : 4 uA Typ at 5.5 V_{IN}
- Ultra-Low Stand-by Current
  I_{SD} : 20 nA Typ at 5.5 V_{IN}
- Smart Control Pins
  I_{EN} and I_{SEL} : 3 nA Typ at V_{EN} or V_{SEL} > V_{IH}
  R_{EN} and R_{SEL} : 500 kΩ Typ
- No Cross Conduction Between Two Inputs
- Reverse Current Blocking when Disabled
- Operating Temperature Range: -40 to 85 °C
- HBM: 6 kV, CDM: 2 kV

APPLICATIONS

- Smart IoT Devices
- Wearables / Portable Devices

PACKAGE

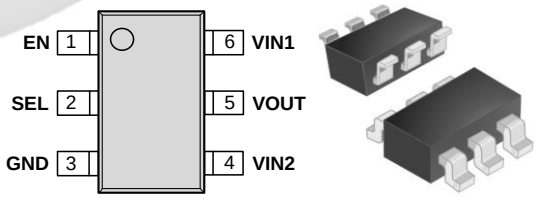

SOT23-6L

PACKAGE OUTLINE

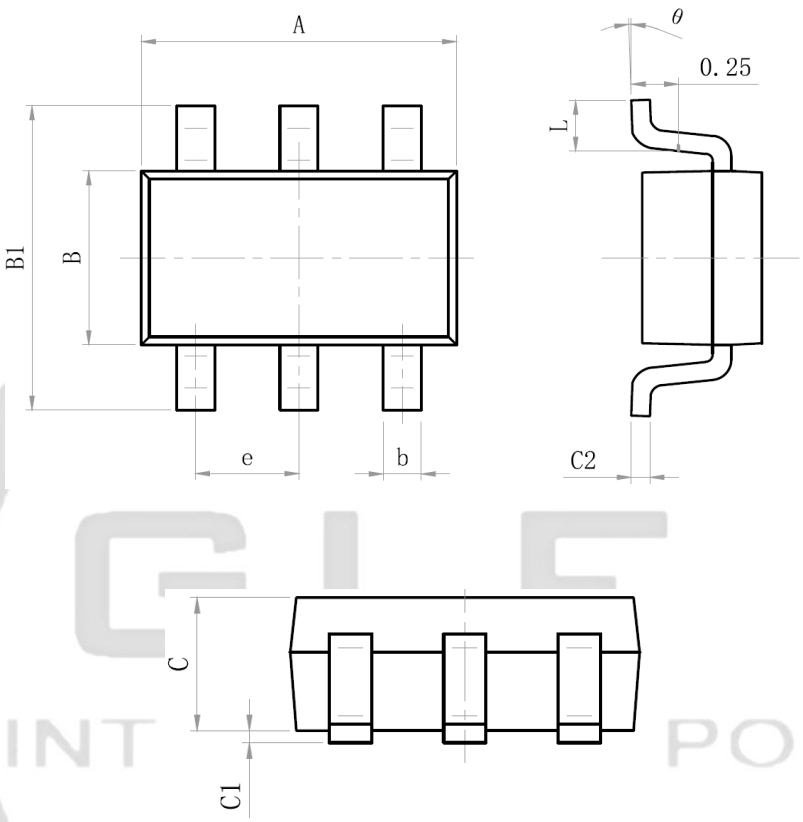

Size / Mark	Min(mm)	Max(mm)	Size / Mark	Min(mm)	Max(mm)
A	2.82	3.02	C	1.05	1.15
e	0.95 (BSC)		C1	0.03	0.15
b	0.28	0.45	C2	0.12	0.23
B	1.50	1.70	L	0.35	0.55
B1	2.60	3.00	θ	0°	8°

TAPE AND REEL INFORMATION

REEL DIMENSIONS

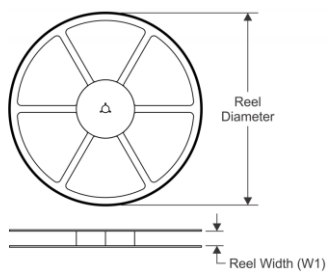

QUADRANT ASSIGNMENTS PIN 1 ORIENTATION TAPE

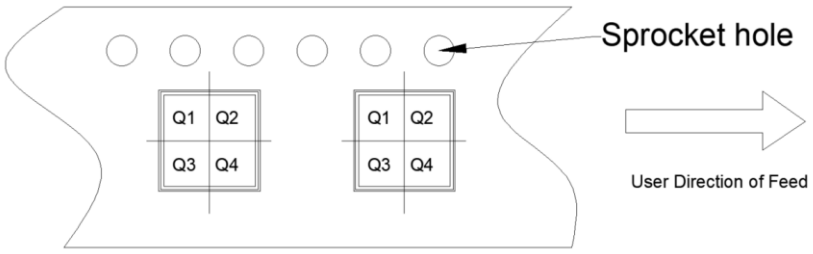

TAPE DIMENSIONS

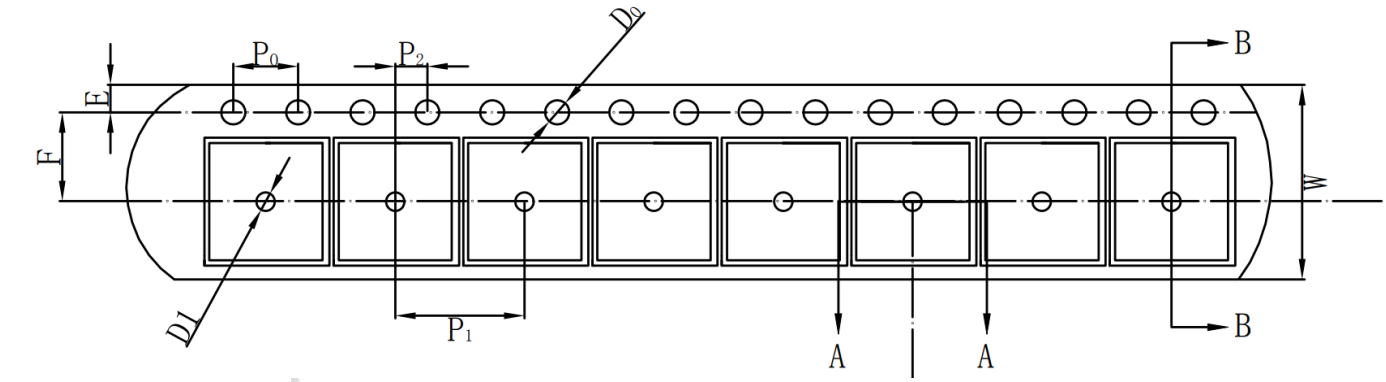

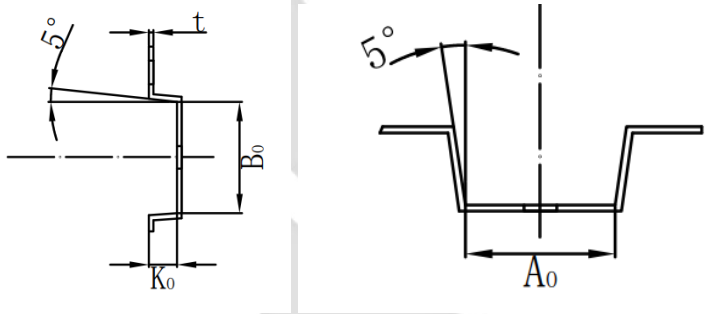

Device	Package	Pins	SPQ	Reel Diameter(mm)	Reel Width W1	A0	B0	K0	P1	W	Pin1
GLF4001-T2G7	SOT23-6	6	3000	178	9	3.25	3.30	1.38	4	8	Q3

Remark:

A0: Dimension designed to accommodate the component width

B0: Dimension designed to accommodate the component length

C0: Dimension designed to accommodate the component thickness

W: Overall width of the carrier tape

P1: Pitch between successive cavity centers